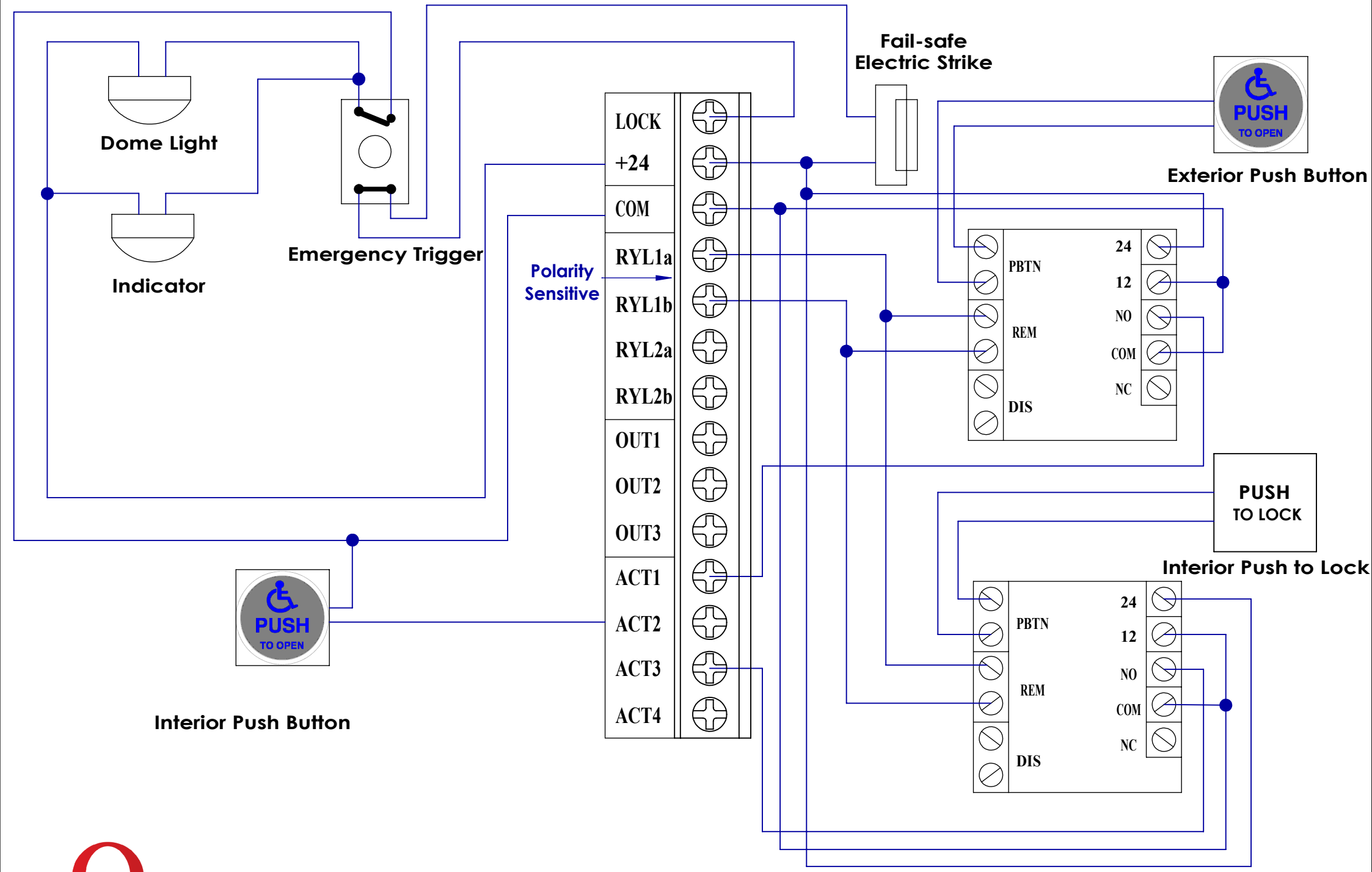

OMEGA AUTOMATICS	OMEGA Washroom Aura System	title 1100 Rev 2	date Sept. 2018	file OMEGA Washroom Aura System